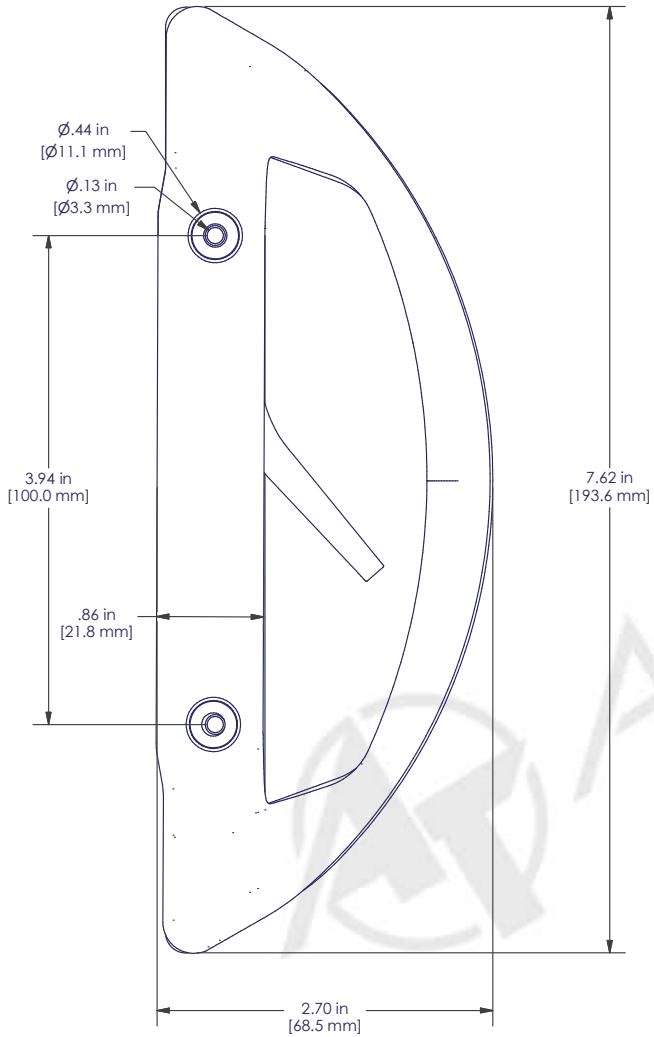

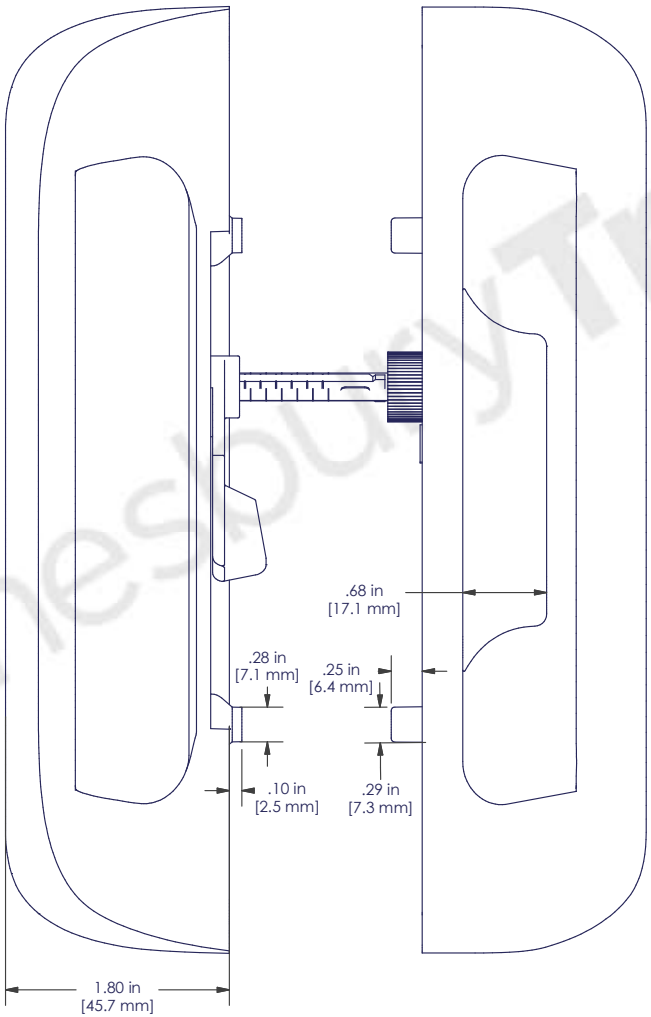

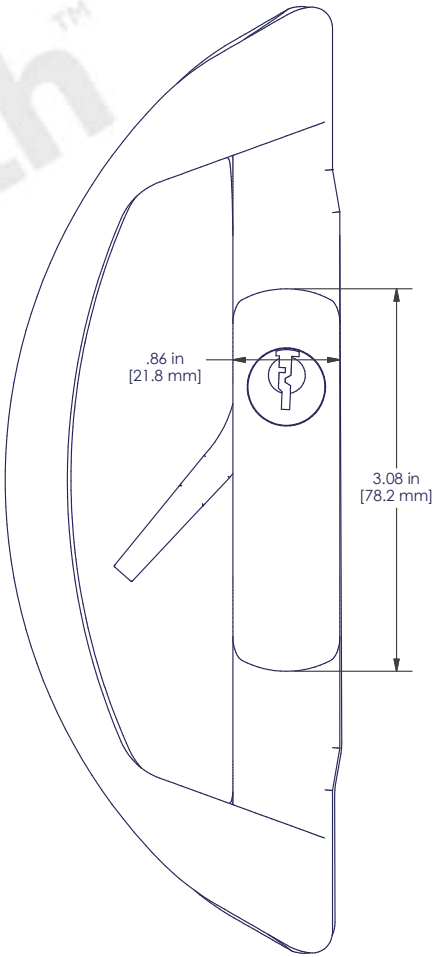

CUSTOMER PAGE

AmesburyTruth™
Engineered Solutions. Trusted Results.

INTERPRET PER: ASME Y14.5M-2009
UNITS: INCH
THIRD ANGLE PROJECTION

DRAWING TITLE: OMEGA ACTIVE HANDLE SET

SCALE:
SHEET 1 OF 1
PART #: 98.03.XX.103